EE350 Spring 2025-2026

Succesive Approximation Register Prelab

Objective

In this pre-lab, we will be implementing a Successive Approximation Register (SAR) Analog-to-Digital Converter (ADC) using the Proteus Design Suite. The goal is to understand the interaction between digital control logic and analog signal conditioning. An Arduino Uno microcontroller will function as the SAR controller, generating a PWM signal that is converted into a DC voltage by an RC Low Pass Filter with resistor and a capacitor. This voltage is compared against an unknown reference V_{ref} using an Op-amp comparator to drive the decision logic.

SAR ADC Implementation with Proteus

- **Install Drivers:** Refer to the Proteus Arduino Library.zip and add the needed files to your Proteus path.
- **Implement the Circuit:** Construct the schematic below in Proteus using the provided Arduino drivers. The design must include an RC Low Pass Filter to smooth the PWM output and an Op-amp comparator to provide feedback to the microcontroller.
- **Connect the Monitor:** Attach a Virtual Terminal to the Tx/Rx pins of the Arduino. This is required to observe the serial output, which displays the step-by-step voltage approximation and the final digital result during simulation. You can open the Virutal Terminal during the simulation from the "Debug" window.
- **Setup the Firmware:** Load the provided .hex file into the Arduino component properties. This file contains the pre-compiled SAR logic.

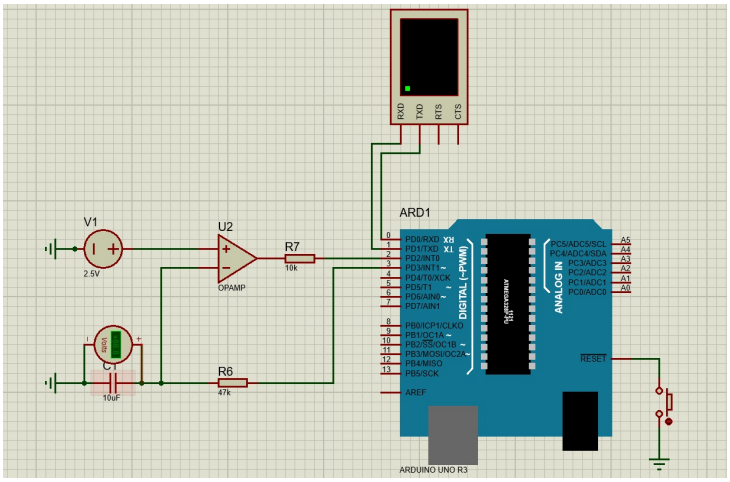

Figure 1: Example Circuit

- **Verify Simulation:** Run the simulation and use the Virtual Termianl to verify that the filtered PWM signal correctly approximates the input voltage.
- **Theoretical Calculation:** Calculate the theoretical Quantization Error for both 4-bit and 10-bit ADC resolutions at input voltages of 1V, 2.5V, and 4V. Record these expected error values to compare with future measurements from the inlab.
- **Explanation:** Explain your understanding of the circuit and the simulation. Reflect on the results you measured.